An Optimization Procedure for Springback Compensation using LS-OPT

Nielen Stander, Mike Burger, Xinhai Zhu and Bradley Maker

Livermore Software Technology Corporation, 7374 Las Positas Road, Livermore, CA

Email: nielen@lstc.com

Abstract

The purpose of this study is to develop a methodology for springback compensation in sheet metal stamping operations. An optimization method is employed to minimize the difference between the simulation results and the intended design. This procedure results in an optimized die shape. LS-DYNA, LS-OPT and True*Grid* are used to input original tool geometry, material, and process parameters, identify design variables, perform springback simulations, and output optimized tool geometry. It is found that springback trends are consistent with changes in the die shape, which provides an effective strategy for springback compensation. The standard NUMISHEET'96 S-Rail is used as a benchmark example in this study.

Introduction

Springback is an elastic deformation which occurs at the end of a sheet metal stamping process, as the stamped part is removed from the stamping tools. Springback has the effect of changing the part's finished shape so that it no longer matches the tools. If this shape deviation is large, it can cause difficulty during a subsequent assembly process, or cause twisting in the assembled part. Accordingly, it is important to produce parts whose finished shape closely match the designed surface. Usually corrections to compensate for springback are made by modifying the shape of the stamping tools.

The design of these modifications, or die compensation, is a very complex process. Two commonly used methods are the trial-and-error and spring-forward methods. The trial-and-error method predicts die modifications based on engineering experience. Usually many years of die-shop experience are necessary before an engineer can successfully guess how to change the dies. The trial-and-error method is also very time consuming: to make a modified die set usually takes months of time. In addition, several trial-and-error corrections are frequently required before adequately compensated parts are obtained. Accordingly, the trial-and-error process is very expensive, often requiring over one million dollars to make a die that produces "good" parts. When new materials are used or when a new design is adopted, previous experience cannot be applied directly. The

difficulties associated with the trial-and-error method can result in costs and lead-times that are out of control.

Computer simulation has gained popularity in the stamping industry due to its speed and low cost, and it has been proven to be effective in prediction of formability and springback behavior. However, to date, no effective simulation method has been found to compensate the die based on the predicted springback.

The spring-forward method is based on numerical simulation by Finite Element Analysis (FEA). The method begins by performing a stamping simulation, from which information for the deformed part is obtained while it is still positioned in the closed dies. This information includes the geometry, and material stress and strain data. The method then assumes that subsequent springback deformation will be driven by material stress, and that if the stress distribution through the material thickness is reversed, the resulting springback deformation will also be in the reversed direction, as compared to the actual part. Based on this logic, the geometry which is obtained by springback analysis with reversed stress can be used to predict modifications to the dies. This method is very simple to apply, and it is most popular numerical method. However, the method suffers from two major shortcomings that prohibit use in many practical applications. These are *under-cut* (interference between the parts during the stamping process) and *accuracy*.

The purpose of this study is to investigate an effective algorithm for springback compensation. True*Grid*[1] is used as a pre-processor to parametrically define geometry of the rigid tools, LS-DYNA software (LSTC, 2001) is used as a Finite Element based solver and LS-OPT (LSTC, 1999, Stander & Craig, 2001) is used to guide the solution to an optimum. The NUMISHEET'96 S-RAIL example is used as a benchmark.

Approach

The die compensation analysis presented here uses an optimization method. Many stamping/springback simulations are performed during an iterative process. Using the parametric preprocessor True*Grid*, the user can determine a set of design variables. These may include geometric variables, such as critical locations where tool elevation should be modified, important tool radii, and starting blank geometry. Process variables may also be specified, such as drawbead restraining forces and binder and pad loads. Simulation cost will increase linearly with the number of design variables.

A set of constraints may also be specified for each design variable. These are used to limit the range of design variations to reasonable values. For example, tool radii could be limited to be no less than two millimeters, and elevation changes could be limited not to exceed five millimeters. In addition, strength criteria such as maximum thickness reduction of the sheet metal or FLD criteria can be specified.

Using this design variable information, LS-OPT will automatically create a family of stamping/springback models (according to an experimental design method), and submit several simultaneous simulation jobs. These jobs may run in parallel or be queued on one

[1] Registered Trademark of XYZ Scientific Applications Inc., Livermore, CA

or more computers, and since they execute independently, will exhibit near perfect parallel efficiency. LS-OPT will also automatically monitor job progress, interrogate results, and catalog results data in an organized way.

After collecting and processing results from the first set of simulations, LS-OPT will predict optimized values for each design variable. This prediction will be made using a response surface method. Using these optimized design variables, the next set of simulations (experimental design) will be automatically created and submitted. This iterative process will continue until each variable has been determined within a specified tolerance, or until a limiting number of iterations have been completed. Various options for the optimization objective can be made available, e.g. RMS or maximum discrepancy with respect to a desired geometry.

During the optimization process, interactive software will be available to view all results obtained to date and monitor the evolution of each design variable.

Example: Numisheet 96 S-Rail

The tools and sheet-metal blank of the Numisheet 96 springback benchmark problem are shown in Figure 1. The punch is controlled at a constant 1m/s while the binder is driven by a piece-wise linear force curve as shown in Fig. 2.

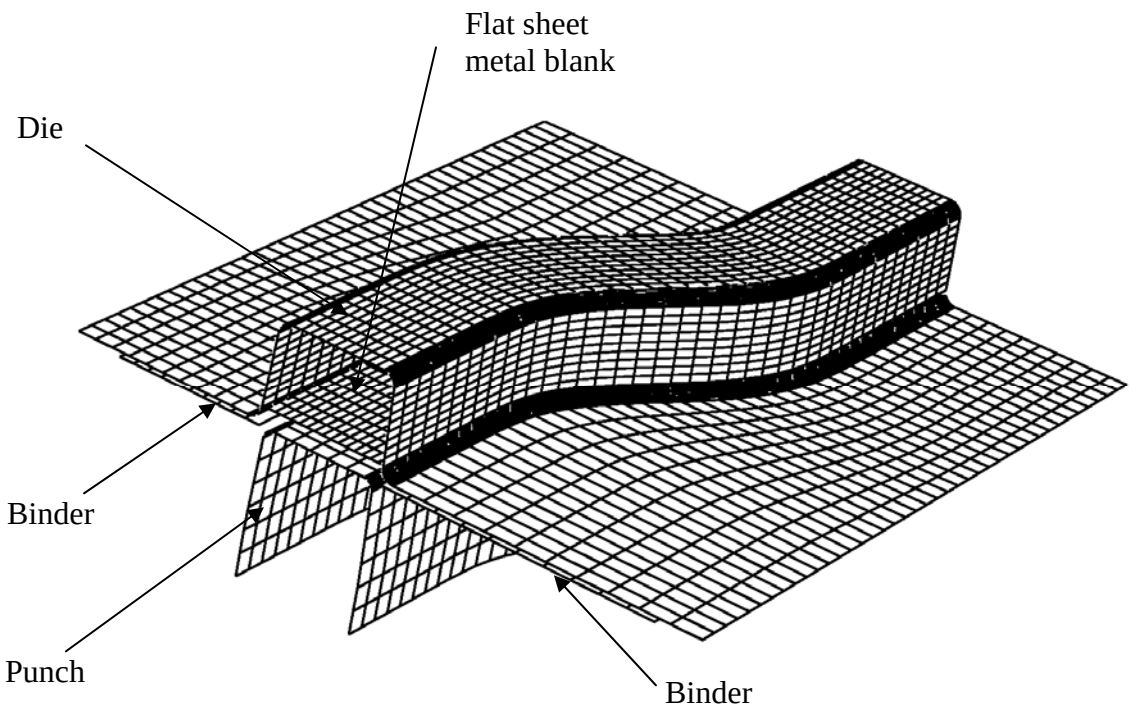

Fig. 1: Numisheet 96 benchmark: Punch, die, binders and blank (baseline design)

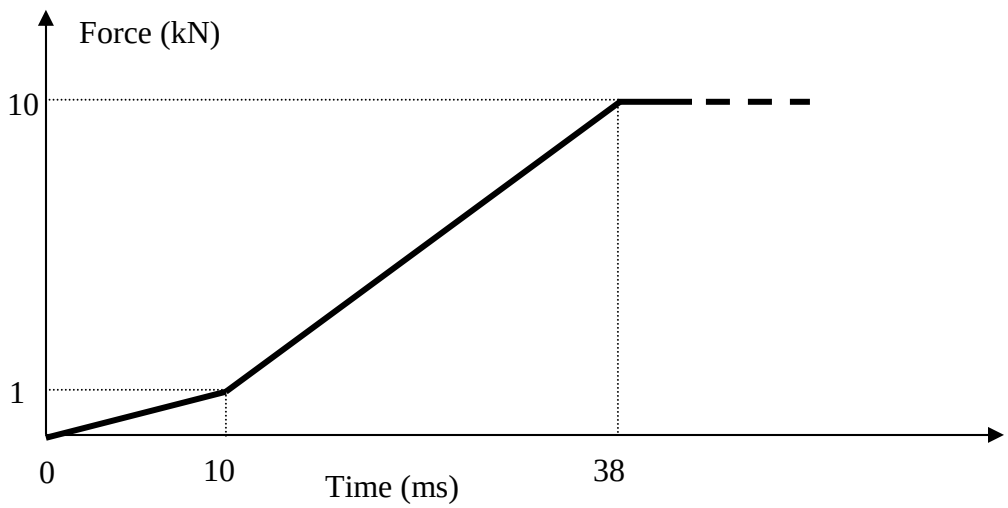

Fig. 2: Binder Force as a function of time

Formulation of the optimization problem

The objective of the design procedure is to maximize the flatness of the flange pair as if the work-piece were to be welded to a flat surface. To achieve this, a flat surface is fitted through 24 selected flange points, using a linear regression analysis. These points are selected at the flange inner and outer positions as shown in Figure 3. The offset of a point can be computed as $e_i = z_i - Z_i$ where z_i is the vertical coordinate of the point i and Z_i is the vertical position of the point projected on the plane. Using the selected points, two possible main approaches are available to formulate the design problem.

1. *RMS:* Compute a root mean square (RMS) residual of the perpendicular offset of each point on the work-piece after springback, $\sqrt{\sum_{i=1}^{24} e_i^{\,2}/24}$ **,** and use it as the objective for minimization.
2. *Maximum:* Constrain the offset of each point: $-E \le e_i \le E$, i=1,2,…24 and minimize the auxiliary variable E, keeping E>0. The effect of this formulation is to minimize the greatest offset after springback.

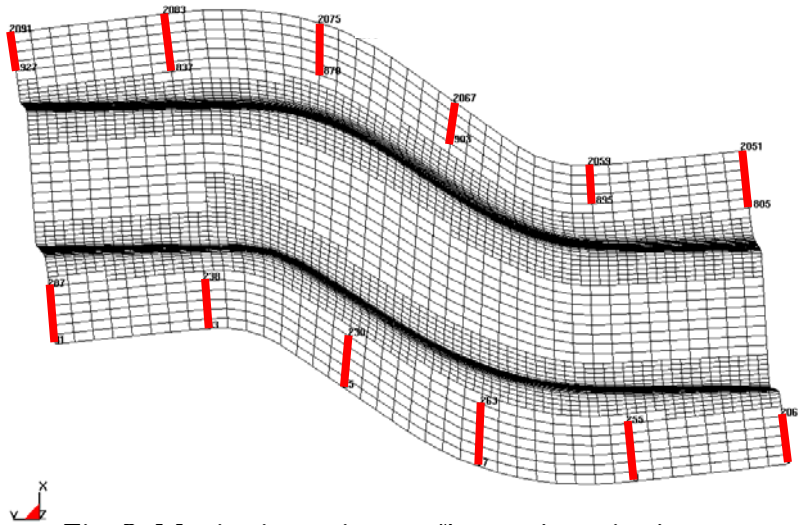

Fig. 3: Monitoring points on flanges (top view)

Design variables: Nine design variables were chosen, namely the radius *r* which applies to all four corners of the cross-section as well as the positions of 8 control points on the outer perimeter of the die and binders. The model was parameterized with True*Grid*. The control points are connected by straight lines to hinge points at the tangent line to the radius. The control points define the tool surfaces by controlling the *z*-coordinates of the selected points as shown in Figure 4. For the baseline design all the *x* values are zero.

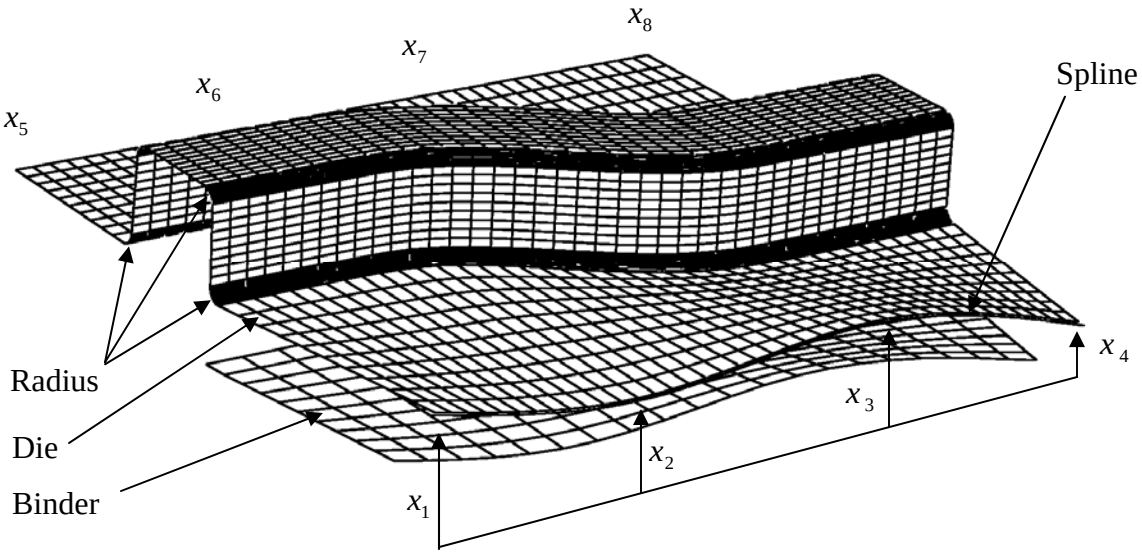

Fig. 4: Design variables (x_1 to x_8 and Radius)

Note that the binder has been parameterized to assume the same shape as the die for a snug fit of the tools. At t=0 the binders and die have to be sufficiently spaced to prevent interference with the sheet metal blank (see Figs. 4 and 6). This condition is formulated in the True*Grid* input file.

Simple bounds have been chosen for the variables so that the optimization problem formulation becomes:

$$\text{Min } E$$

subject to

$$-E \leq e_i \leq E; \; i = 1, 2, \ldots 24$$

$$-25\text{mm} < x_j < 25\text{mm}; \quad j = 1, 2, \ldots 8$$

$$3\text{mm} < R < 7\text{mm}$$

where R is the corner radius.

Results

LS-OPT, employing Formulation 2 (max. offset) was used to optimize the tool design. The problem was run on an HP V-class 16 processor server. 8 processors were utilized. 16 simulations were conducted per iteration. The time required for a full iteration is 3.5 hours. ~5 iterations were required for convergence. Further iterations were run to attempt finer convergence, but the maximum offset remained at ~0.8mm compared to the baseline 3.2mm (Figure 5a).

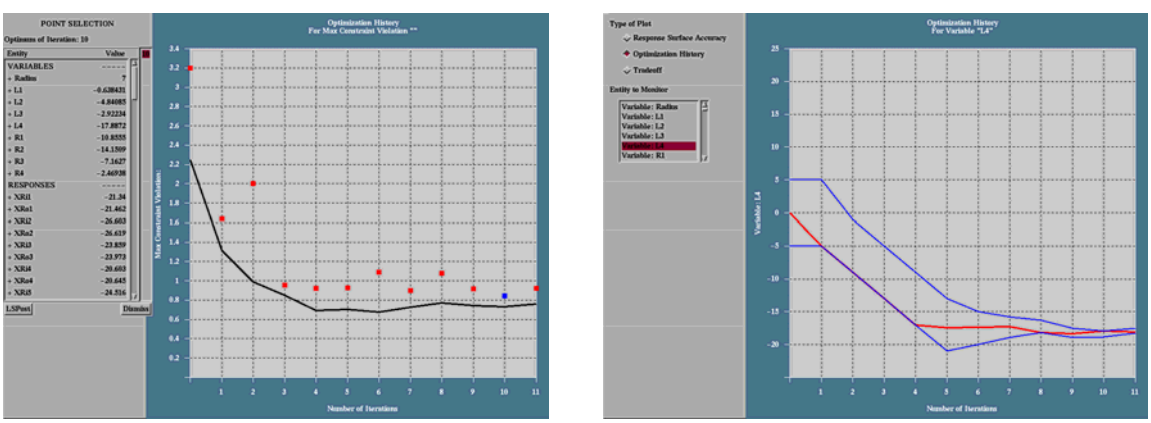

Fig. 5: Optimization history of (a) maximum offset and (b) x_8 (from LS-OPT interface)

The dots represent the simulated results using LS-DYNA, whereas the line represents the response surface prediction. The history of variable x_8 (Bounded line in Figure 5b) suggests convergence by iteration 5 [2]. Figure 6 shows the optimal tool shape that will minimize the surface warp. Note that the optimal flange shape is very close to a flat surface (Figs. 7a, b and c).

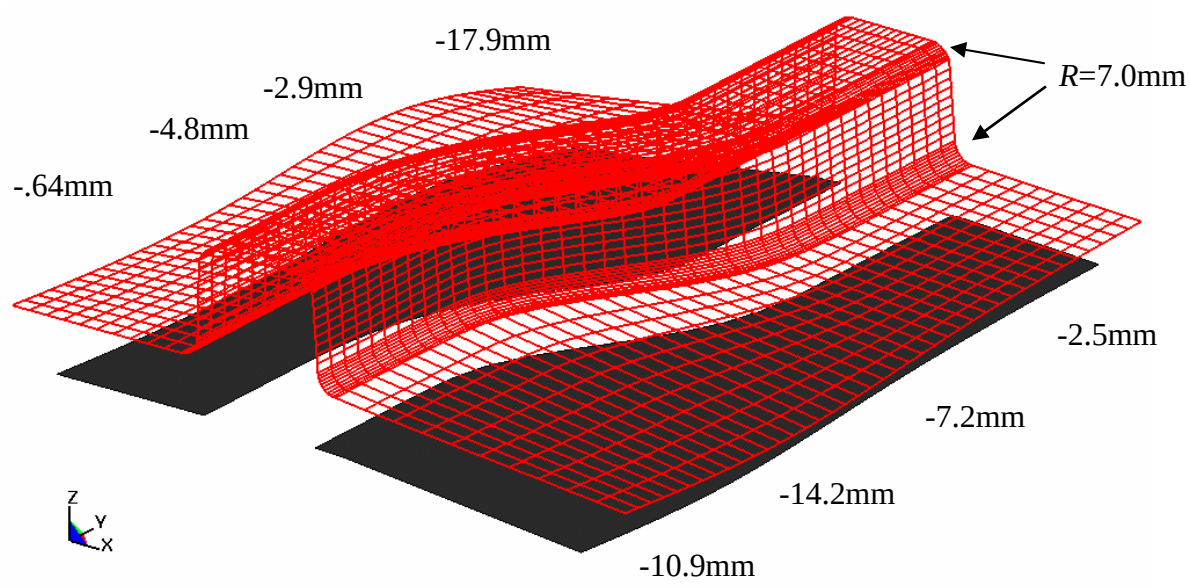

Fig. 6: Optimum die geometry (iteration 10)

Conclusions

From the above benchmark, we can draw the following conclusions:

1. The springback behavior is consistent with small modifications of the tools. Even with the change of the tool, the springback still happens in the same direction as before.
2. Springback compensation is possible. Since the springback behavior is consistent, it is possible to use an iterative method and obtain the desired tool shape.
3. Enough design variables should be used.
4. Using True*Grid*, the surfaces are mathematically defined, and therefore the parametrization can be designed in accordance with manufacturing requirements.

[2] The upper and lower bounding lines represent the bounds of the region of interest.

Drawbacks of the optimization method are as follows:

1. The choice of design variables depends heavily on the user's experience, which makes it difficult for complex part design.
2. Optimization is expensive in terms of simulation time.

In spite of the drawbacks, the results are encouraging in terms of the accuracy of the results obtained and the robustness of the method. In the mean time other, mesh-based methods are being investigated as a means to accelerate the optimization phase of the procedure.

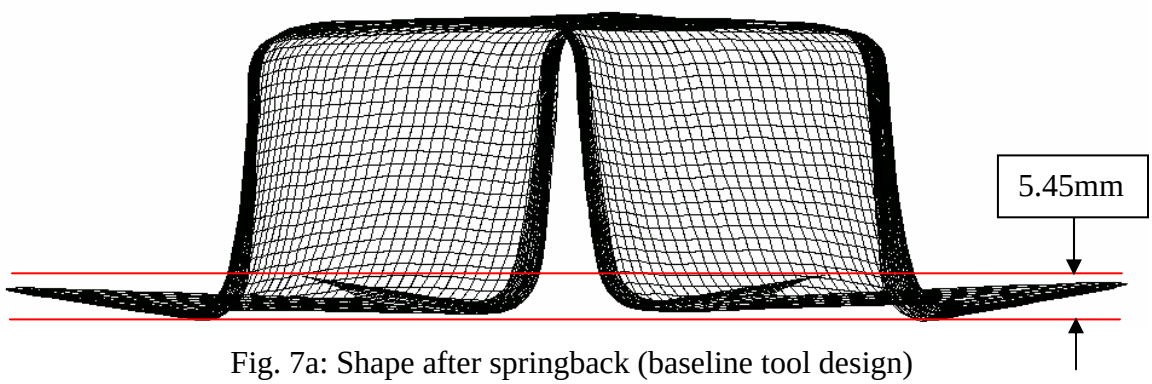

Fig. 7a: Shape after springback (baseline tool design)

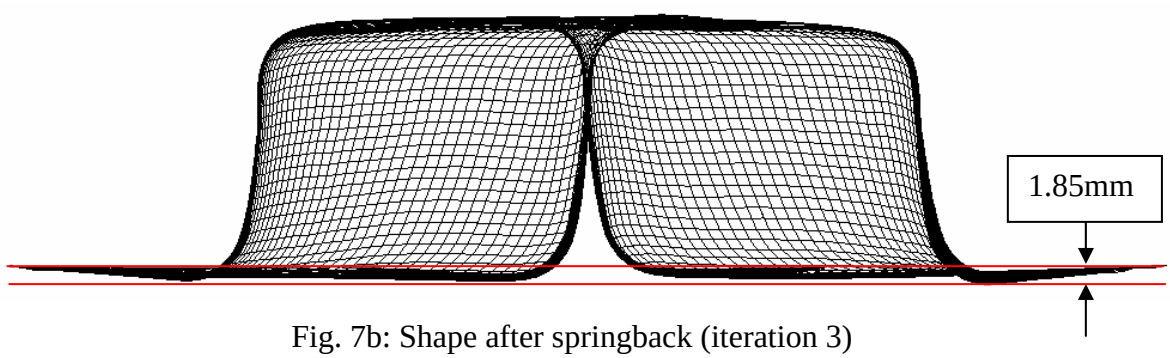

Fig. 7b: Shape after springback (iteration 3)

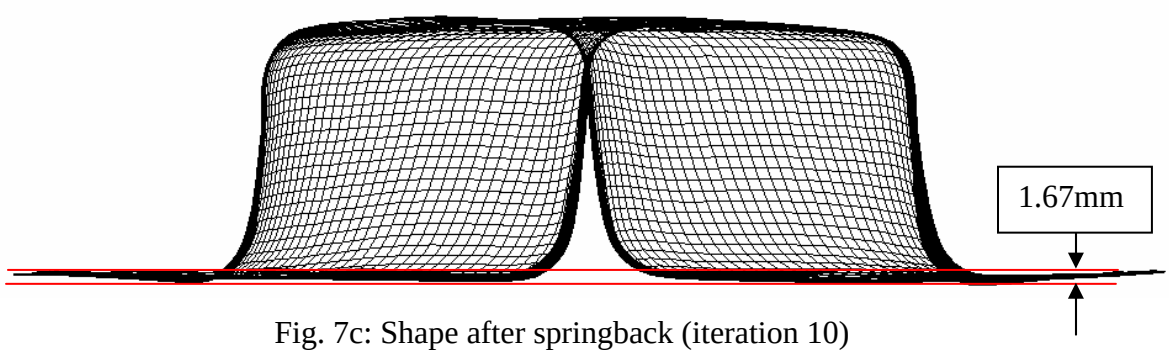

Fig. 7c: Shape after springback (iteration 10)

References

Livermore Software Technology Corporation, LS-OPT Version 1 User's Manual, 1999.

Livermore Software Technology Corporation, LS-DYNA User's Manual, Version 960, 2001.

Stander N, Craig KJ. On the robustness of the successive response surface method for simulation-based optimization. Submitted to *Engineering Computations*. July 2001.